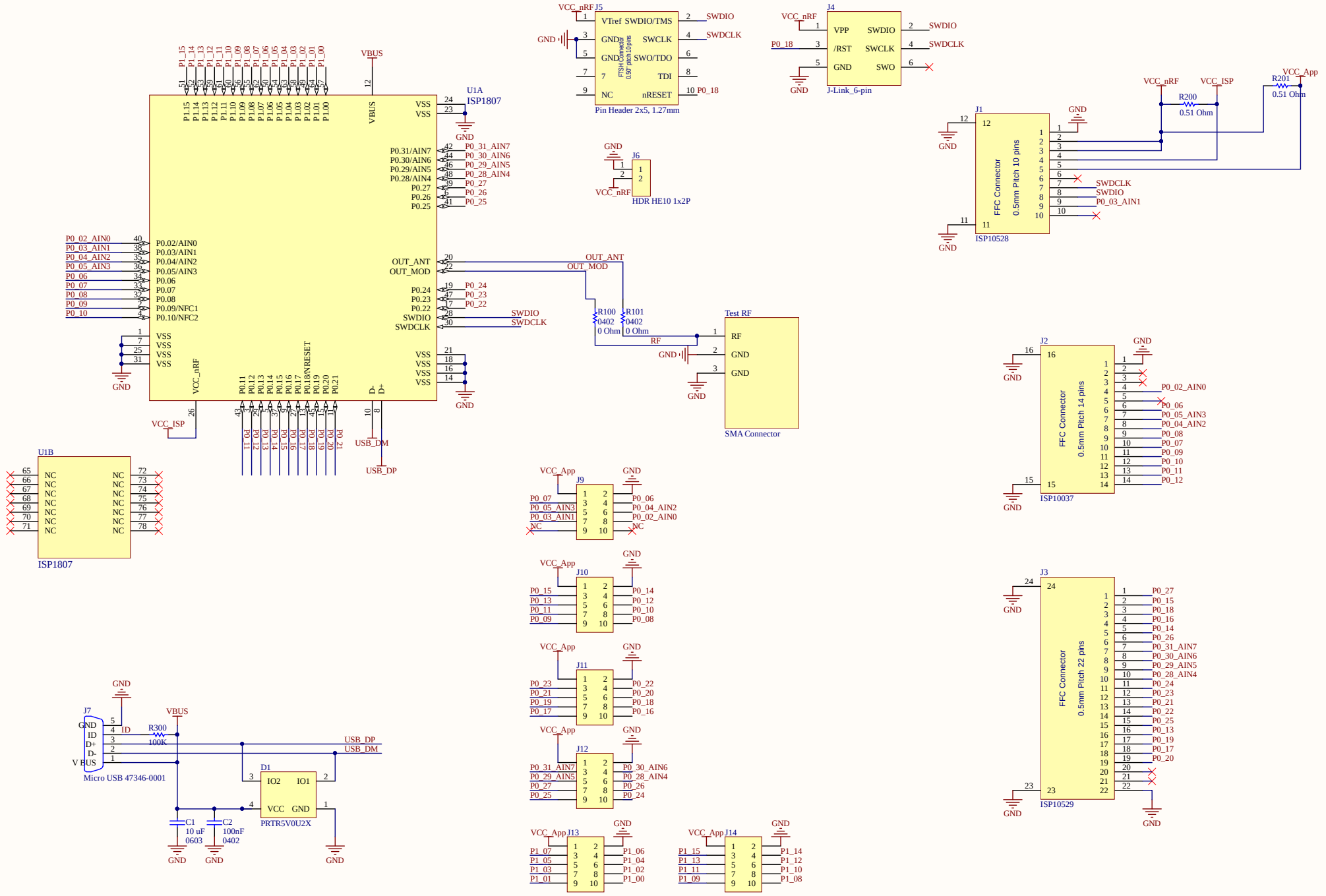

Title	ISP1807LR Test Board		Insight SIP 400 avenue Roumanille Sophia ANtipolis 06906 France
Size: A3	Number: ISP1807_TB	Revision: BR1	
Date: 19/06/2019	Time: 18:50:49	Sheet 1 of 1	
File: C:\Data\BTLE\ISP1807\ISP1807-LR_nRF52_Test Board\ISP1807-LR_nRF52_Test Board_2019.01.31\ISP1807-LR_TB_RevBR			